YOSHIMURA
RESEARCH&DEVELOPMENT OF AMERICA, INC.
5420 DANIELS STREET STE A, CHINO CA., 91710 · (800) 634-9166 · (909) 628-4722 · FAX (909) 591-2198
www.yoshimura-rd.com

FENDER ELIMINATOR KIT

075BG196810
Triumph Street Triple 765

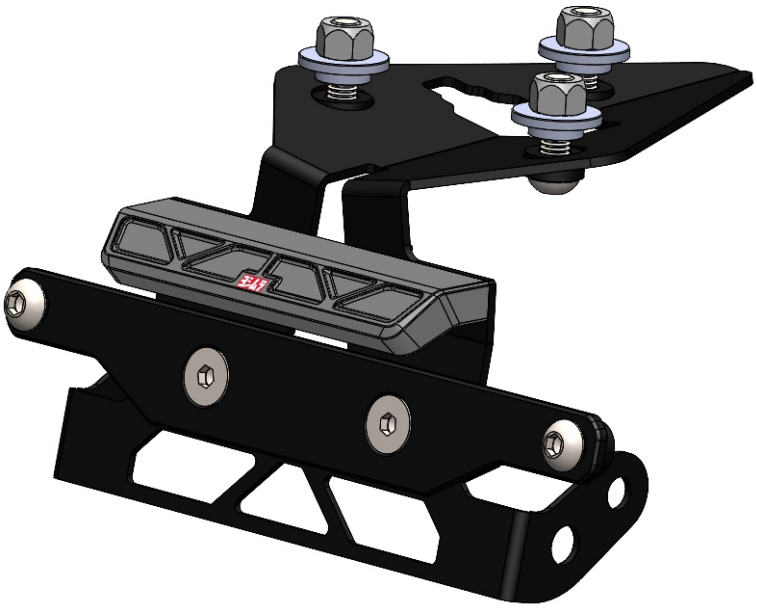

THIS PRODUCT IS NOT DOT APPROVED.
Yoshimura R&D of America, Inc. is not liable or responsible for any resulting event caused by the installation of this product. Check with local laws and regulations for compliance prior to installation and use. This product is not intended for use on public highways.

#1 Qty. 1

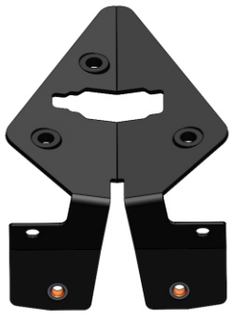

19681-FEBKT
Fender Eliminator Bracket

#2 Qty. 1

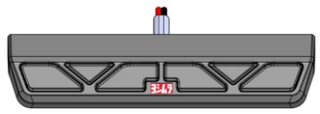

075BG-LH-T2
License Plate Light

#3 Qty. 1

FE-LP-BKT
License Plate Bracket

#4 Qty. 2

6MMWASHER-SS
6mm Washer

#5 Qty. 1

19681-TSB-B
OEM Turn Signal Bracket

#6 Qty. 5

6MMLN-SS
6mm Lock Nut

#7 Qty. 3

ALS-075
Aluminum Spacer

#8 Qty. 2

M6X12FS-SS
6mm x 12mm
Flat Head Screw

#9 Qty. 4

M6X10BHS
6mm x 10mm
Button Head Screw

#10 Qty. 2

M4X6BHS
4mm x 6mm
Button Head Screw

#11 Qty. 3

M6X20BHS
6mm x 20mm
Button Head Screw

Service Parts & Accessories

License Plate Frame (070BG-LPF-K)	Standard Turn Signal Kit (075BG-STD-O-K)
Sequential Turn Signal Kit (075BG-SEQ-O-K)	Micro Turn Signal Kit (075BG-MIC-D-K)
Black Ti Bolts (M6X10-TI-BLK-K)	Gold Ti Bolts (M6X10-TI-GOLD-K)
Oil Slick Rainbow Bolts (M6X10-TI-OS-K)	

Assembly Diagram

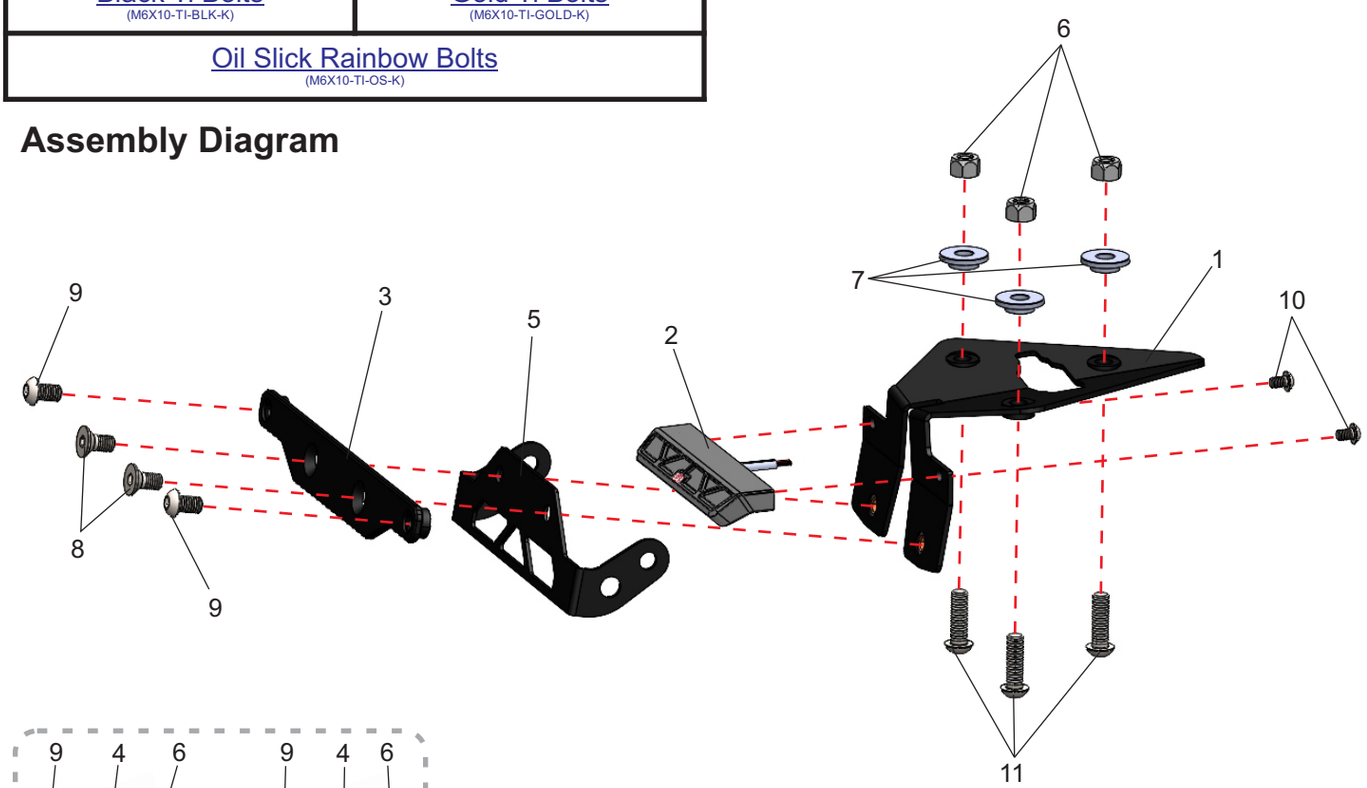

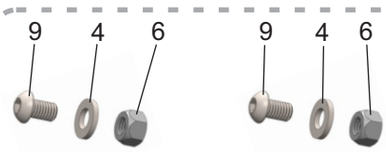

Button head screws, washers, and lock nuts are for the bottom two license plate holes.

Removal

1. Remove passenger seat.

2. Locate and disconnect the rear fender's sub-harness connector.

3. While securely supporting the stock fender assembly, remove the four bolts securing the stock fender and carefully remove the stock fender assembly making sure not to damage license plate light and turn signal connectors.

4. Disassemble the stock rear fender and disconnect the turn signals and license plate light. Remove the sub-harness from the rear fender assembly.

   Note: The rear fender's sub-harness will be re-used when installing the Yoshimura Fender Eliminator.

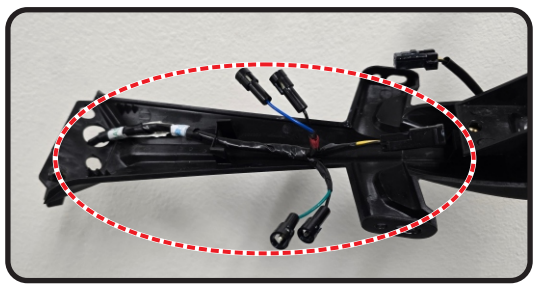

5. Remove the OEM rubber spacer from between the under-tail and stock rear fender. It will not be re-used.

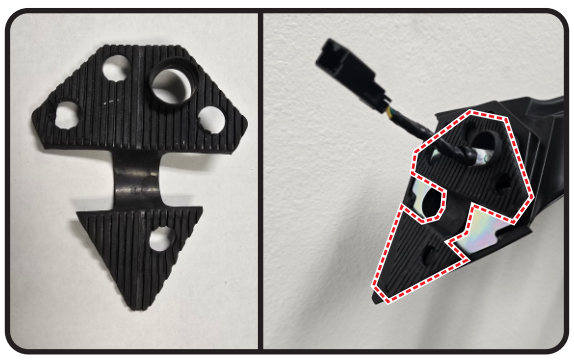

Installation

1. Reconnect the stock rear fender's sub-harness to the main wiring harness connector with all connectors and wires contained inside the tail section.

2. Install the stock rear turn signals onto *19681-TSB-B*, OEM turn signal bracket using the stock mounting hardware.

3. Install *19681-TSB-B*, OEM turn signal bracket and *FE-LP-BKT*, license plate bracket onto *19681-FEBKT*, fender eliminator bracket using *M6X12FS-SS*, flat head screws.

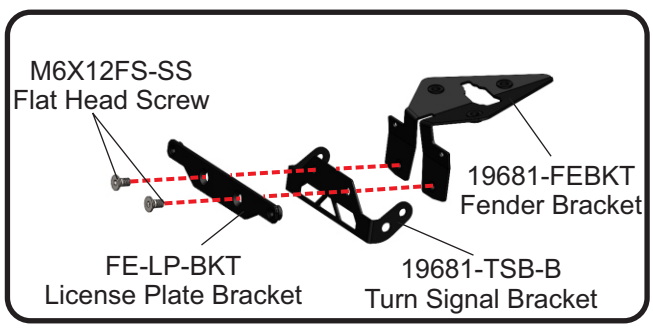

   Note[1]: Route the OEM turn signal wires and connectors through the channel of *19681-FEBKT*, fender eliminator bracket so that they rest above the bracket as shown below.

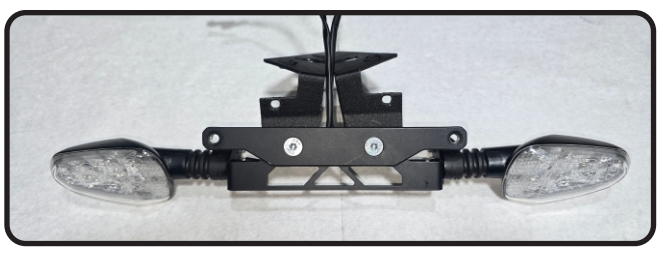

Note[2]: For Yoshimura LED turn signal kit installation, see appendix below.

** Standard / Sequential LED Turn Signal Kit **

** Micro LED Turn Signal Kit **

   Note[3]: *M6X10BHS*, button head screws, will be used to secure the license plate to *FE-LP-BKT*, license plate bracket. *6MMLN-SS*, nylon lock nuts and *6MMWASHER-SS*, washers are for the bottom license plate holes.

4. Install *075BG-LH-T2*, license plate light onto *19681-FEBKT*, turn signal bracket using *M4X6BHS*, button head screws.

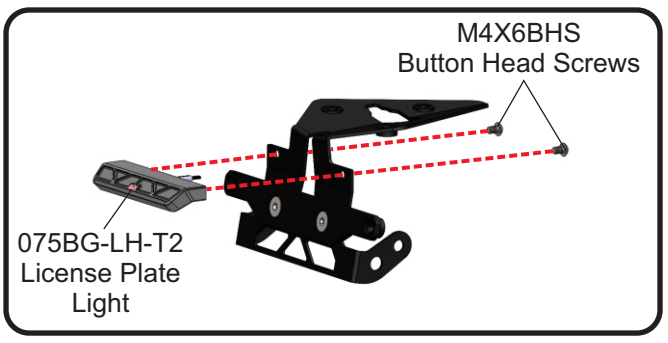

   Note: Before securing the light with the button head screws, make sure to have the wires and connector routed through the channel of the fender eliminator bracket so that they rest above the bracket as shown below.

5. Route the connectors for the license plate light and stock turn signals through the left hole of the under-tail and connect to the sub-harness connectors.

6. Install *19681-FEBKT* onto the rear fender mounting point using *M6X20BHS*, button head screws, *ALS-075*, aluminum spacers, and *6MMLN-SS*, nylon lock nuts. Torque to 10 Ft-lbs / 13.5 N-m.

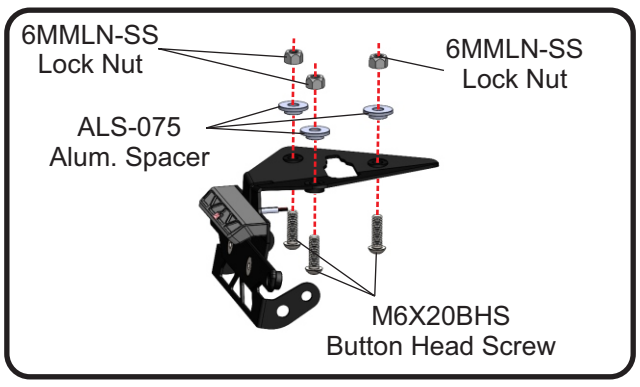

7. Re-install the passenger seat.

8. Check for proper function of the license plate light, turn signals, brake light, and that all brackets and components are secure prior to riding.