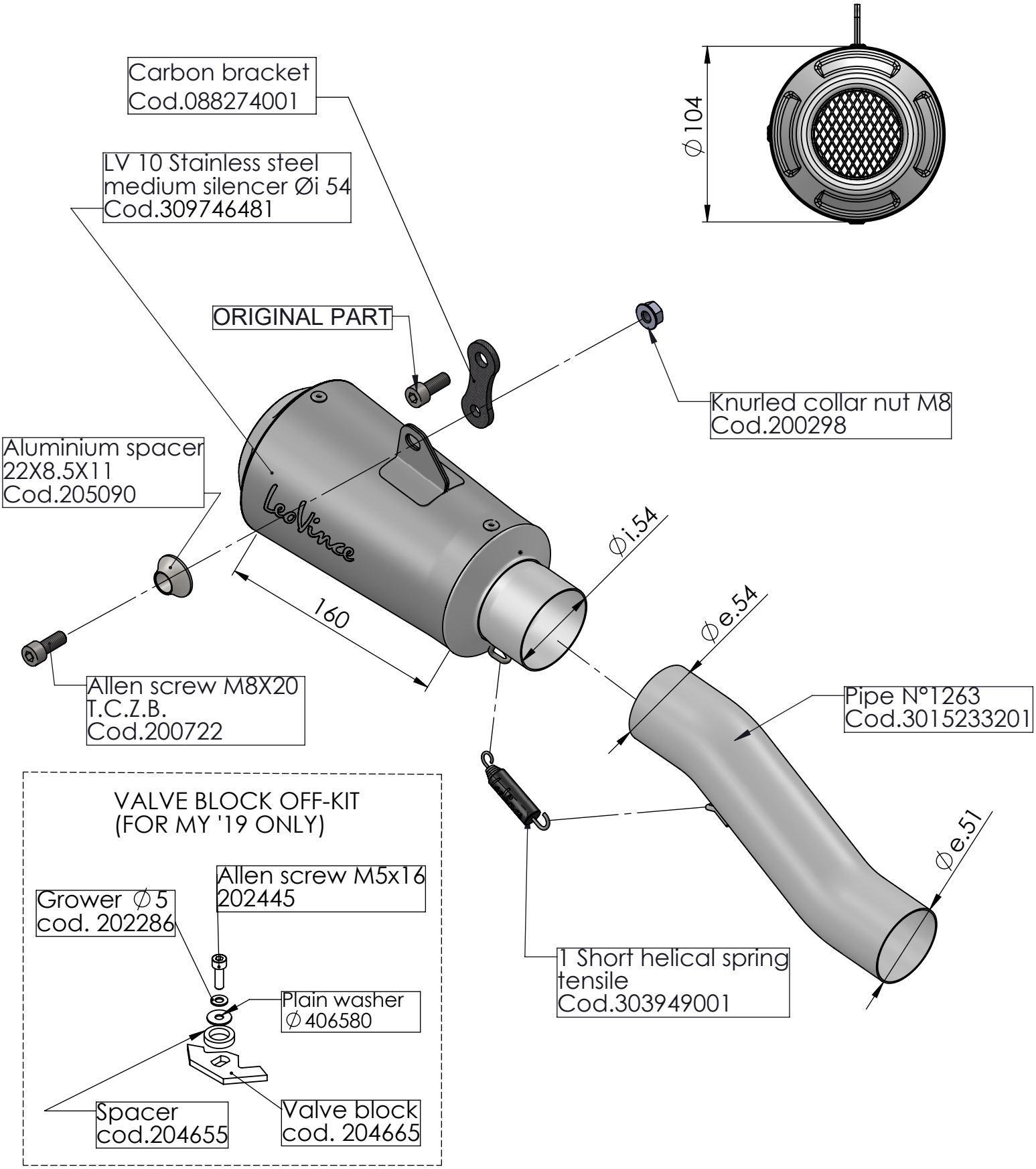

ART. 15233

KAWASAKI ZX-6R-NINJA

SLIP ON - LV 10 - STAINLESS STEEL